FOXCONN®

SPECIFICATIONS

FUTURE BUS CONNECTOR

1F Series,
Rec. Solder Fit Type
2.0mm Pitch
5Rows

Mechanical
Contact Retention Force: *0.50Kg min.*

Electrical
Voltage Rating: *750V*
Current Rating: *1A*
Contact Resistance: *55mΩ max.*
Dielectrical Withstanding Voltage*: 1000V*
Insulation Resistance: *1000MΩ min.*

Physical
Housing: *LCP, UL 94-0, Ivory White*
Contact: *Phosphor Bronze*
Plating: *See "ORDERING INFORMATION"*

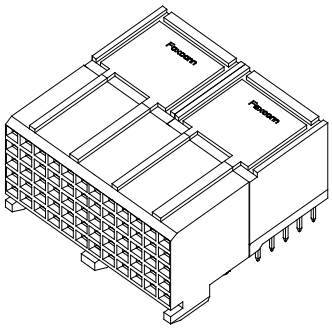

DRAWING

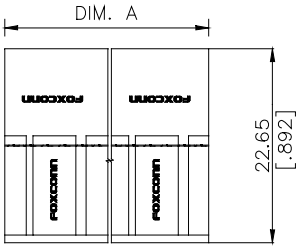

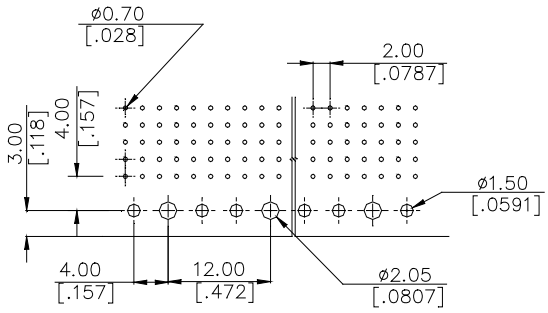

RECOMMENDED PCB LAYOUT

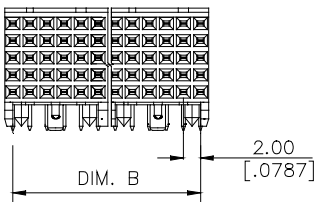

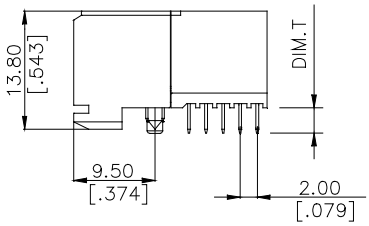

ORDERING INFORMATION

PRODUCT NO.: 1 F 2 2 * * * * - S * 0 1 0 N - A *

POS. NO.
030: 30 POS.
060: 60 POS.
090: 90 POS.
120: 120 POS.
150: 150 POS.
240: 240 POS.

MATING AREA PLATING
1: GOLD FLASH
3: 0.76um(30u")MIN. GOLD PLATING
5: 1.27um(50u")MIN. GOLD PLATING
A: 0.76um(30u")MIN. FPT PLATING
0.25um(10u")MIN. GOLD INCLUDED

LEAD FREE CODE
N: NONE
F: LEAD FREE PLATING

TAIL LENGTH (T)
1: 2.90mm
2: 2.73mm
3: 3.53mm

P/N	POS.	DIM. A	DIM. B
1F22240*-S*010N-AF	240	95.90	94.00
1F22150*-S*010N-AF	150	59.90	58.00
1F22120*-S*010N-AF	120	47.90	46.00
1F22090*-S*010N-AF	90	35.90	34.00
1F22060*-S*010N-AF	60	23.90	22.00
1F22030*-S*010N-AF	30	11.90	10.00

All specification & dimensions are subject to change, please call your nearest Foxconn sales representative for update information.